APPENDIX J

STOOLS (SURGEONS, ANAESTHETISTS)
(Metric Units)

Scope of Amendment. The requirements for the screwed spindle have been amended.

Subsection 4. 3. 2(e). Amend the second sentence to read as follows: "The lower end shall be screwed with an acceptable form of screw thread that has a pitch not greater than 6 mm and not smaller than 3 mm."

Subsection 4. 3. 3(e). Amend the first sentence to read as follows: "The spindle shall be of bright mild steel bar of nominal diameter 25 mm and shall be screwed with an acceptable form of screw thread that has a pitch not greater than 6 mm and not smaller than 3 mm."

SPECIFICATION

for

STOOLS (SURGEONS, ANAESTHETISTS)

(Metric Units)

SECTION 0. APPLICABLE STANDARDS

0.1 The latest issues of the following standards form part of this specification:

BS 1490	Aluminium and aluminium alloy ingots and castings for general engineering purposes
SABS 621	Castors for hospital equipment
SABS 657	Steel tubes for general engineering purposes
SABS 726	Medical trolleys (dressing/medicine; instrument; anaesthetists)
SABS 728	Electroplated coatings of nickel and chromium

SECTION 1. SCOPE

1.1 This specification covers the material, dimensional, and constructional requirements for stools used by surgeons and anaesthetists in hospital operating theatres.

NOTE: The attention of users of this specification is drawn to the following requirements that must be specified in tender invitations and in the order or contract:

a) The type of stool (see 3.1)

b) In the cases of Types A and B and if relevant, that the legs are to be fitted with castors (see 4.3.2(b) and 4.3.3(b))

c) In the cases of Types A and B, the material of the seat, and whether the seat is to be flat or dished (see 4.3.2(d) and 4.3.3(d))

d) In the cases of Types A and B, the range of height adjustment (see 4.3.2(e) and 4.3.3(e)).

SECTION 2. DEFINITIONS

2.1 For the purposes of this specification the following definition shall apply:

Acceptable. Acceptable to the purchaser.

SECTION 3. TYPES

3.1 Stools shall be of one of the following types, as specified by the purchaser:

Type A. Having a circular seat made of stainless steel, aluminium, or other acceptable material, mounted on a stainless steel stand and capable of height adjustment by means of a chromium plated screwed spindle that is exposed when the seat is raised.

Type B. Similar to Type A, but having a cover tube that totally encloses the spindle.

Type C. Having

a) a saddle-type seat with an adjustable back rest; and

b) a foot-operated hydraulic mechanism for raising and lowering the seat.

SECTION 4. REQUIREMENTS

4.1 MATERIALS

4.1.1 Rolled Mild Steel Sections and Bar. Rolled mild steel sections and bar shall be of a good quality mild steel, free from cracks, fins, laminations, and other defects.

4.1.2 Mild Steel Tubes. Mild steel tubes shall comply with the requirements for Grade 56 or Grade 68 Class D2T2 Tubes of SABS 657.

4.1.3 Stainless Steel. Stainless steel shall be 18/8 (AISI Type 304) stainless steel or other acceptable austenitic stainless steel of weldable quality.

4.1.4 Welding Electrodes and Filler Rods. Filler metal used in fusion welding and braze welding shall be such as to produce a joint complying with the relevant requirements of 4.2.

4.1.5 Aluminium. Aluminium shall comply with the requirements for alloy LM6 of BS 1490 or shall be another acceptable aluminium alloy.

4.2 FUSION WELDED JOINTS. Parts joined by fusion welding and braze welding shall be close fitting and in correct alignment, and the joints shall have mechanical properties and (when relevant) corrosion resistance of at least the same order as those of the parent metal. Fusion welding and braze welding shall be carried out by acceptable methods. Weld faces shall be smooth, clean, and free from porosity, cavities, spatter, and trapped slag. They shall merge smoothly into the surface of the parent metal without overlap or undue undercut. The weld metal, heat affected zone, and adjacent parent metal shall be free from cracks. Where welding is done from one side only there shall be full penetration of the joint.

4.3 DESIGN AND CONSTRUCTION

4.3.1 General. The design of the stools shall be generally similar to the typical design shown in Figure 1, 2, or 3. The dimensions shall conform to those given in the appropriate figure and 4.3.2, 4.3.3, or 4.3.4, as relevant. Except where otherwise indicated, the dimensions shall be subject to a tolerance of ± 0.3 mm.

4.3.2 Type A

a) Pillar. The pillar shall be a stainless steel tube of outside diameter at least 50 mm and wall thickness at least 1.60 mm. It shall have an internal brass bush of length at least 65 mm that is threaded internally to form a medium fit with the screwed spindle (see (e) below). The lower end of the bush shall be securely attached (by brazing or other acceptable means) to the top of a stainless steel sleeve that supports it in the position indicated in Figure 1. The lower end of the sleeve shall rest upon a stainless steel plate that is welded to the bottom of the pillar. The upper end of the bush shall be so counter-bored to a diameter of 27 mm for a depth of at least 12 mm as to leave an effective length of thread of 50 mm. The upper end of the pillar shall be fitted with a brass guide bush of length at least 32 mm that forms a running fit with the plain portion of the spindle. The bush shall be securely attached to the pillar by suitable corrosion resistant fasteners or by other acceptable means, and its upper surface shall be flush with the top of the pillar.

b) Legs. The stool shall have four legs of stainless steel tube of outside diameter at least 25 mm and wall thickness at least 1.60 mm. The legs shall be equally spaced and fusion welded to the lower part of the pillar. The floor ends of the legs shall be closed with dome-shaped stainless steel gliders that are securely attached to the tubes, or, if so required by the purchaser, they shall be fitted with 75 mm castors complying with the requirements of SABS 621.

c) Foot rest. The stool shall have a foot rest (see Figure 1) that consists of a tubular ring of stainless steel tube of outside diameter at least 20 mm and wall thickness at least 1.60 mm. The ring shall have an outside diameter of not less than 355 mm and not more than 430 mm and shall be welded to the top surfaces of the legs in a position concentric with the pillar.

d) Seat. The seat shall have a diameter of 330 ± 5 mm, and shall be made of stainless steel, aluminium, or other acceptable material, as specified by the purchaser. The top surface of the seat shall be flat or dished (as required by the purchaser) and its edges shall be suitably rounded. The lower surface shall be so attached to the spindle as to ensure a rigid connection which will not loosen in use (see also (e) below).

Subsection 4.3.2(e). Amend the second sentence to read as follows: "The lower end shall be screwed with an acceptable form of screw thread that has a pitch not greater than 6 mm and not smaller than 3 mm."

e) Screwed spindle. The spindle shall be of bright mild steel bar of nominal diameter 25 mm. ~~The lower end shall be screwed with an acceptable form~~ of screw thread that has a pitch of 3 mm. The lengths of the spindle and of the screw thread shall be such that the height of the seat can be adjusted over the range of 485 mm to 685 mm or 660 mm to 865 mm, as required by the purchaser and subject to a tolerance of ± 5 mm. The plain (unscrewed) part shall be chromium plated and shall have an acceptable flanged boss at the top that provides for rigid attachment of the seat.

4.3.3 Type B

a) Pillar. The pillar shall be a stainless steel tube of outside diameter at least 50 mm and wall thickness at least 1.60 mm and shall have an internal brass bush of length at least 50 mm that is threaded to form a medium fit with the screwed spindle (see (e) below). The upper surface of the bush shall be flush with the top of the pillar and the bush shall be securely attached to the inside of the pillar by silver solder or other acceptable means. The top thread of the bush shall be so chamfered as to facilitate easy entry of the screwed spindle. The lower end of the pillar shall be closed by a stainless steel plate that is welded to the bottom of the pillar.

b) Legs. The requirements of 4.3.2(b) shall apply.

c) Braces. The legs shall have braces of stainless steel tube of outside diameter of at least 20 mm and wall thickness at least 1.20 mm. They shall be fusion-welded to adjacent legs in the position shown in Figure 2.

d) Seat. The requirements of 4.3.2(d) shall apply.

e) Screwed spindle. "The spindle shall be of bright mild steel bar of nominal diameter 2 ~~diameter 25 mm and sha~~ and shall be screwed with an acceptable form of screw thread that h ~~pitch of 3 mm.~~ pitch not greater than 6 mm and not smaller than 3 mm." A brass g as to provide a running fit in the pillar, shall be fixed to the lower end of the spindle. The lengths of the spindle and of the screw thread shall be such that the height of the seat can be adjusted over the range 485 mm to 685 mm, or 660 mm to 865 mm, as required by the purchaser and subject to a tolerance of ± 5 mm. The spindle shall have an acceptable flanged boss at the top that provides for rigid attachment to the plate to which the cover tube is attached.

f) Cover tube. A stainless steel tube, welded to a stainless steel plate, shall be rigidly attached to the lower surface of the seat. Its length and diameter shall be such as to conceal the spindle and to be clear of the pillar at all elevations of the seat.

4.3.4 Type C

a) Pillar. The pillar shall be of stainless steel or of chromium plated mild steel tube and shall enclose the hydraulic lifting mechanism.

b) Hydraulic lifting mechanism. The hydraulic lifting mechanism shall be foot-operated, shall be of strong construction, and shall be such that, when loaded with a mass of 115 kg, the height of the saddle can be smoothly adjusted over the range 610 mm to 765 mm, subject to a tolerance of ± 5 mm. It shall not leak during use. Parts of the mechanism that extend beyond the pillar when the seat is raised shall be concealed by a stainless steel or chromium plated cover tube which moves over the pillar but is not in contact with it.

c) Legs. The stool shall have four tubular legs of stainless steel or of chromium plated mild steel of outside diameter at least 32 mm and wall thickness at least 1.60 mm. The legs shall be equally spaced and fusion welded to the lower part of the pillar. The floor ends shall be fitted with 75 mm castors that comply with the requirements of SABS 621.

d) Foot rest. A circular foot rest, of stainless steel or of chromium plated mild steel tube of outside diameter at least 20 mm and wall thickness at least 1.20 mm, shall be welded to the top or bottom surface of the legs in a position concentric with the pillar. The outside diameter of the foot rest shall be not less than 355 mm and not more than 440 mm, and an arc (of length approximately 230 mm) shall be cut away at the front for operation of the elevating pedals.

Each cut end of the tube shall be closed off with a stainless steel or mild steel plug (as relevant) welded in position.

e) Saddle. The saddle shall be made of acceptable anti-static rubber or other acceptable material and shall have a depth of at least 330 mm and a width (at its widest part) of at least 380 mm. It shall be well formed and shall incorporate an acceptable spring system (see Figure 3).

f) Back support. The back support shall consist of a curved rest of size approximately 330 mm x 125 mm, made of 10 mm thick aluminium or other acceptable material, and so carried, on two chromium plated steel rods (that run parallel to each other and are securely clamped to the stool below the saddle) or on another acceptable chromium plated steel section, that its height is adjustable.

g) Floor positioner. An acceptable heavy-duty spring-loaded floor positioner (door stop) shall be so fixed to a leg of the stool, in a convenient position, as to enable the stool to be immobilized when so required (see Figure 3).

4.4 FINISH. Steel surfaces shall be free from pits, deep scratches, scale, crimps, buckles, and other defects. Exposed mild steel surfaces shall have a smooth bright chromium plated finish. The plating shall have an even thickness, shall be free from cloudy patches, and shall comply with the requirements for severe use of SABS 728. Exposed stainless steel surfaces shall have a bright polished finish[1]. Exposed aluminium surfaces shall be free from defects and shall have a smooth polished finish.

---

[1] Information regarding a bright polished finish can be obtained from the South African Bureau of Standards.

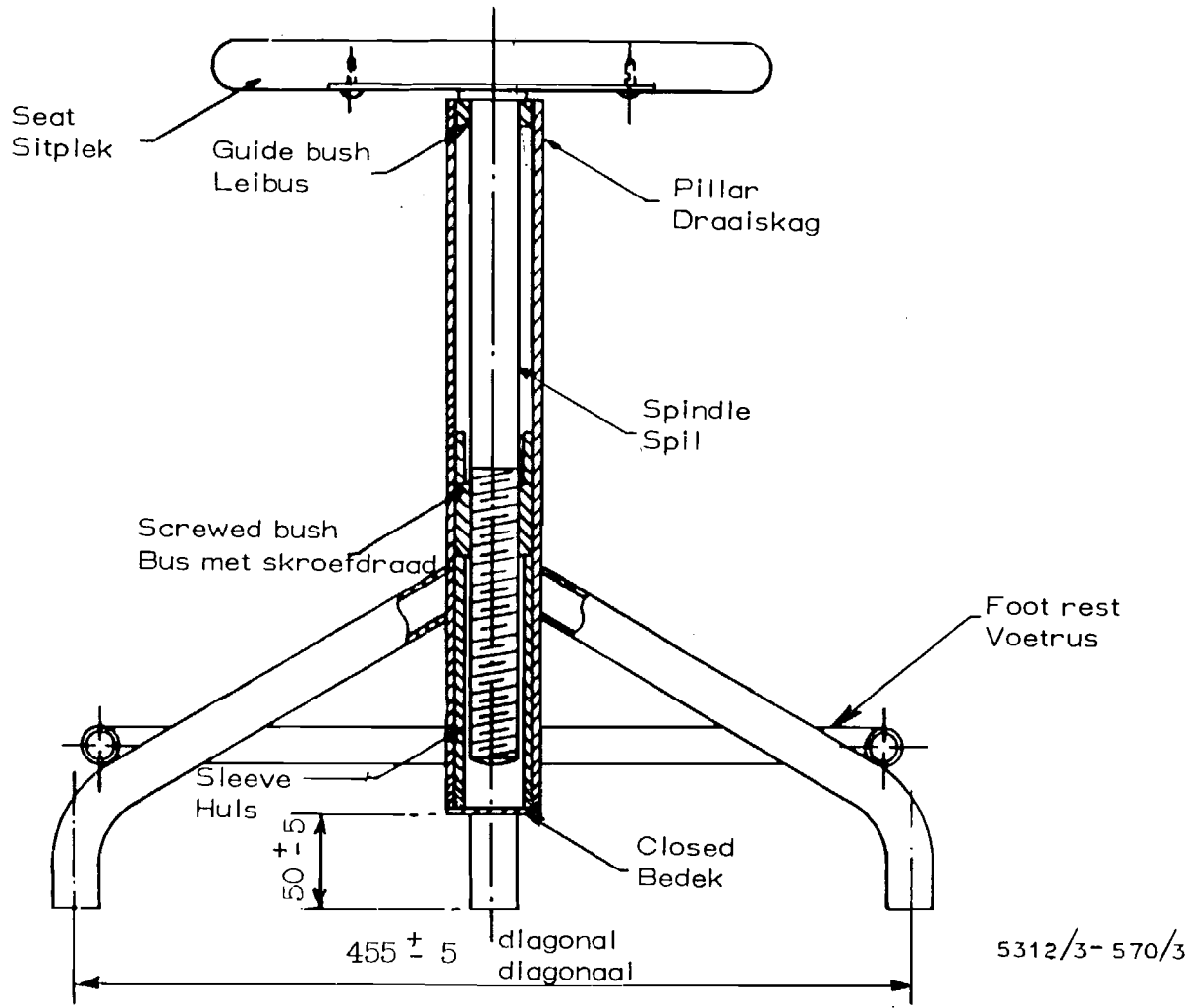

All dimensions are in millimetres
Alle afmetings is in millimeter

Fig. 1 – Stool (Surgeons, Anaesthetists) Type A

Stoel (vir Chirurge en Narkotiseurs) Tipe A

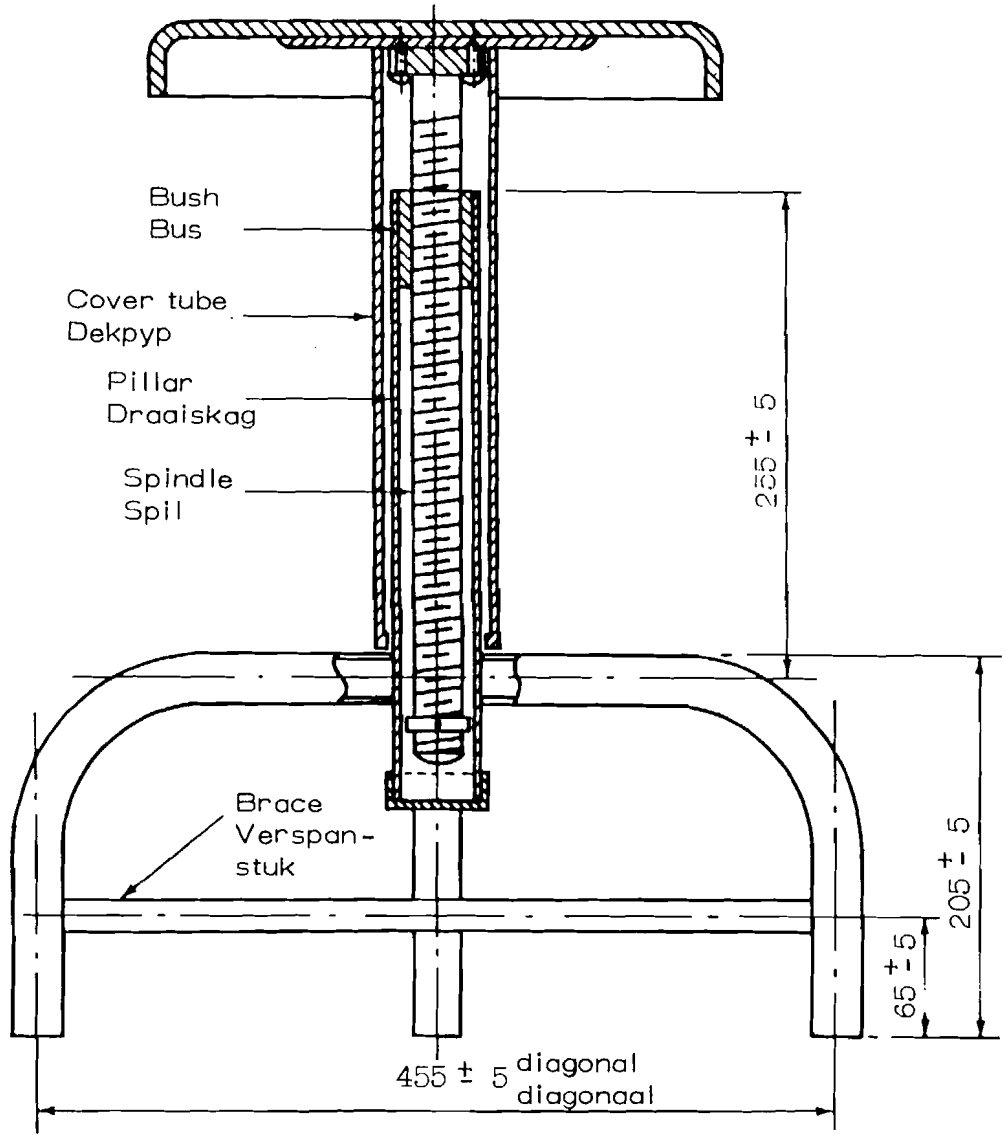

All dimensions are in millimetres
Alle afmetings is in millimeter

5313/1 - 571/3

Fig. 2 — Stool (Surgeons, Anaesthetists) Type B
Stoel (vir Chirurge en Narkotiseurs) Tipe B

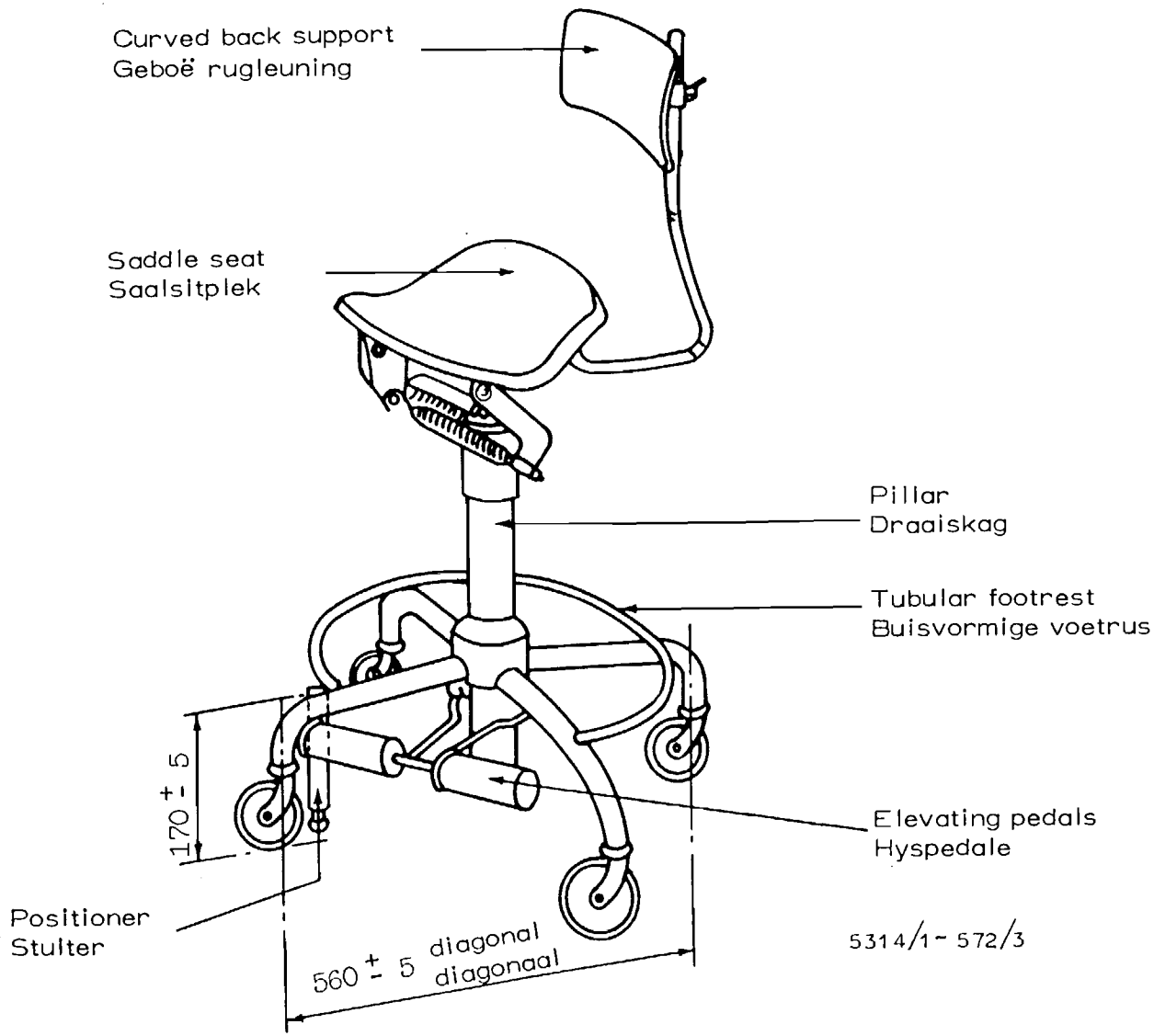

All dimensions are in millimetres
Alle afmetings is in millimeter

Fig. 3 — Stool (Surgeons) Type C
Stoel (vir Chirurge) Tipe C