APPENDIX B

SPECIFICATION

for

ORTHOPAEDIC TRACTION-PIECES AND HANGERS
(Metric Units)

0. APPLICABLE STANDARDS

0.1 The latest issues of the following standards form part of this specification:

SABS 663	Primer and enamel paint for hospital furniture
SABS 728	Electroplated coatings of nickel and chromium (Metric units)
SABS Method 141,	146, 147

1. SCOPE

1.1 This specification covers material, dimensional and constructional requirements for sets of traction-pieces, complete with hangers, intended for orthopaedic use in hospitals.

NOTE: The following requirement must be specified in tender invitations and in the order or contract:

If traction-pieces of mass other than the standard values are required, the number and mass of each such traction-piece (see 3.2 and 3.4.2).

2. DEFINITION

2.1 For the purposes of this specification the following definition shall apply:

Acceptable. Acceptable to the purchaser.

3. REQUIREMENTS

3.1 MATERIAL

3.1.1 Mild Steel Plate and Rod. Mild steel plate and rod shall be of good quality mild steel, and shall be free from cracks, fins, laminations and other defects.

3.1.2 Cast Iron. Cast iron shall be grey cast iron or malleable cast iron of acceptable quality.

3.1.3 Paint. The paint used shall be an enamel or a system comprising a primer and an enamel complying with the relevant requirements for Type III (catalyst hardened) paint of SABS 663.

3.1.4 Epoxy Powder Coating. Epoxy powder coating shall be based on a compounded epoxy resin powder that is suitable for application by a fluidized bed process or an aerostatic spray process.

3.2 TRACTION SET. A traction set shall comprise a hanger and a number of traction-pieces. Unless otherwise specified by the purchaser, the masses of the traction-pieces in a set shall be as follows:

a) three pieces, each of nominal mass 2,0 kg
b) five pieces, each of nominal mass 1,0 kg
c) two pieces, each of nominal mass 0,5 kg

The actual masses of the finished traction-pieces in a set shall not differ from the nominal values by more than 5%.

3.3 DESIGN. The designs of the hangers and the traction-pieces shall be generally similar to the typical designs shown in Figure 1.

3.4 CONSTRUCTION

3.4.1 Hangers. Hangers shall be of mild steel and shall be nickel-chromium plated after fabrication. The overall length shall not exceed 360 mm, and the mass shall not exceed 300 g.

The stem shall be of bright rod of diameter 10 ± 0,5 mm, and shall have at the upper end, a hook that has an internal radius of at least 10 mm. Near the upper end, the stem shall have a flat section (to receive the slots of the traction-pieces) of thickness approximately 3 mm less than the diameter of the rod.

The lower end of the stem shall have a circular loading platform, that is securely fusion- or braze- welded to the end of the stem, and whose upper face is perpendicular to the axis of the stem. The weld shall have adequate penetration, and the weld faces shall be free from cavities and other defects, and shall merge smoothly into the surface of the parent metal.

3.4.2 Traction-Pieces. The traction-pieces shall be grey iron or malleable iron castings, shall have acceptably smooth surfaces, and shall be free from blowholes and other defects. They shall have an enamel or epoxy-powder coating. The diameter of all pieces in a set shall be the same and shall not exceed 100 mm, except that pieces of mass greater than 2 kg (see 3.2) may have a diameter greater than 100 mm.

Each traction-piece shall have a radial slot and a central hole of such dimensions that the piece can be put into position on (and removed from) the hanger only by slipping the slot over the flat section of the hanger.

The shapes of the upper and lower surfaces of the traction-pieces shall be such that, when stacked (in any order), the pieces will locate co-axially on one another without slipping.

The mass in kilogram (e.g. 0,5 kg) shall be clearly embossed on the upper surface of each traction-piece in characters of height at least 10 mm.

3.5 FINISH

3.5.1 Nickel-Chromium Plating. The plating shall comply with the requirements for moderate service conditions of SABS 728.

3.5.2 Enamel Paint and Epoxy-Powder Coatings

a) The thickness of the coating, when measured in accordance with 4.1, shall be at least 60 µm in the cases of epoxy-powder finishes and systems comprising an enamel and a primer, and at least 35 µm in the case of an enamel finish without a primer.
b) When the coating is tested in accordance with 4.2, (using a load of 2 000 g) the scratch produced shall be free from jagged edges and shall not penetrate to the underlying metal.
c) When tested in accordance with 4.3, the coating shall withstand a direct impact of 5,5 J without flaking, cracking, or showing loss of adhesion.

4. METHODS OF TEST

4.1 THICKNESS OF COATING. Use SABS Method 141

4.2 SCRATCH RESISTANCE. Use SABS Method 147.

4.3 IMPACT RESISTANCE. Use SABS Method 146.

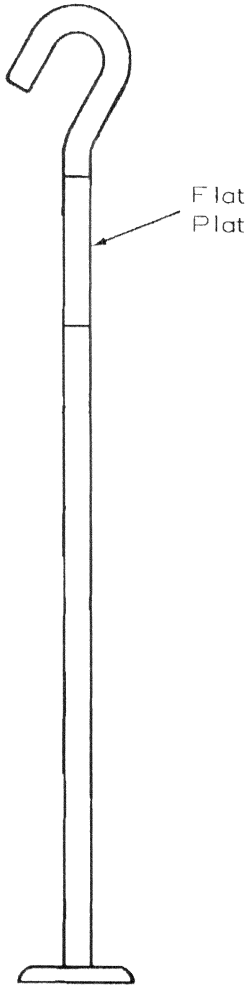

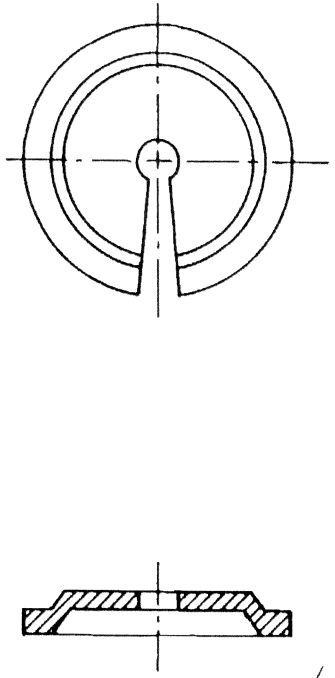

6105/1-841/1

Fig. 1 — Hanger and Traction-Piece
Hangstuk en Traksiestuk

0162
72-08-
V/O

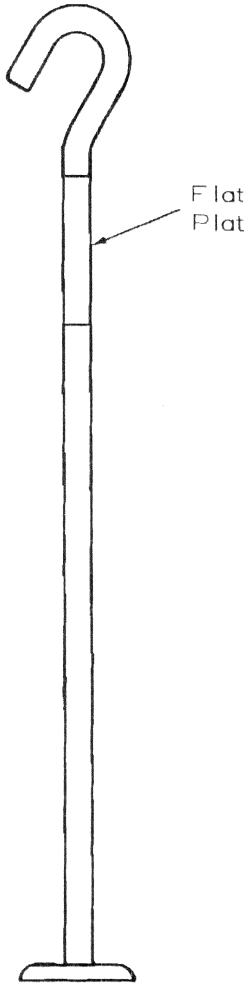

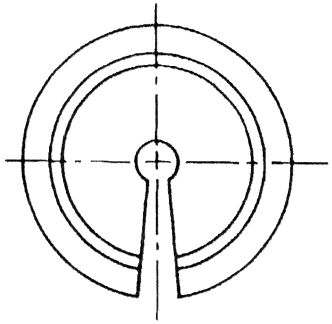

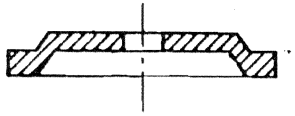

6105/1 - 841/1

Fig. 1 — Hanger and Traction-Piece
Hangstuk en Traksiestuk