RJ24-12-027ME

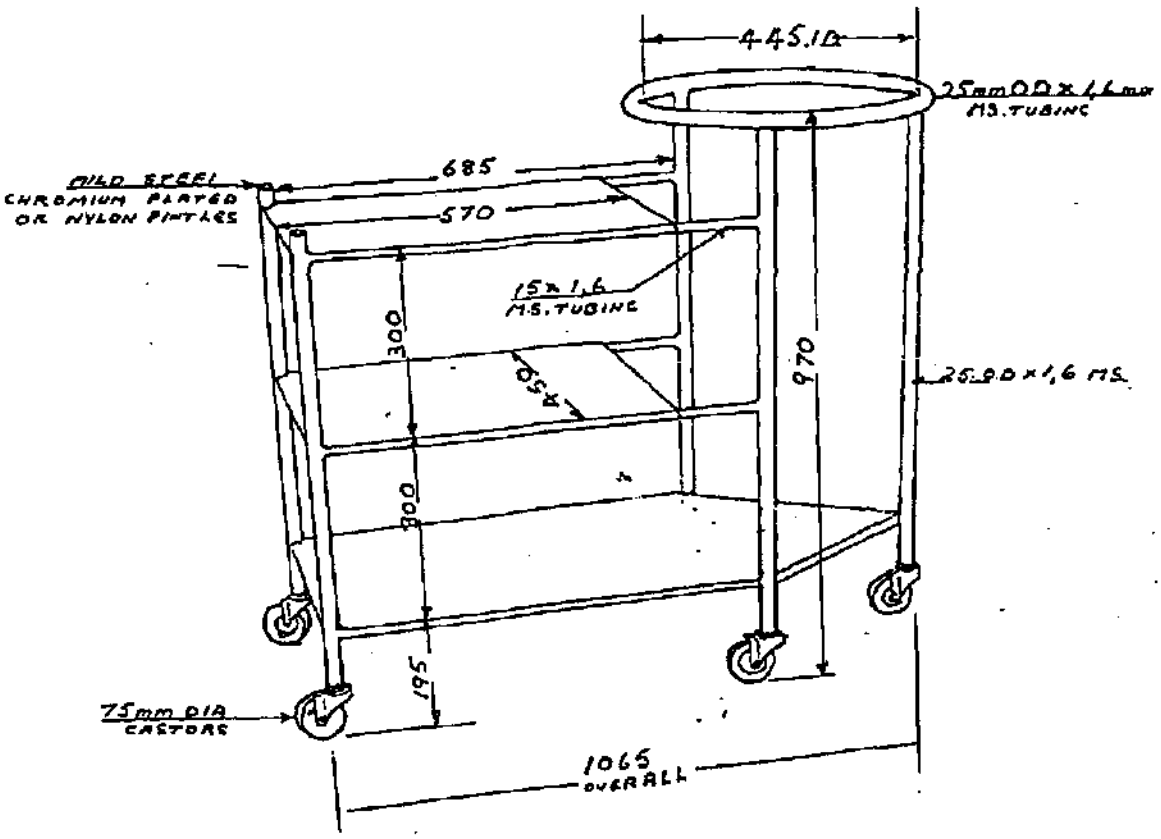

DRAWING ME 00.30.03: ANNEXURE L
TROLLEY, SOILED INSTRUMENT AND LINEN
THEATRE USE, COMPLETE WITH CANVAS RECEPTACLE
SPEC. NO. 874

RAWING ME 00.30.35: ANNEXURE H
CABINET, UTILITY INTENSIVE CARE
SPEC. NO. 5661

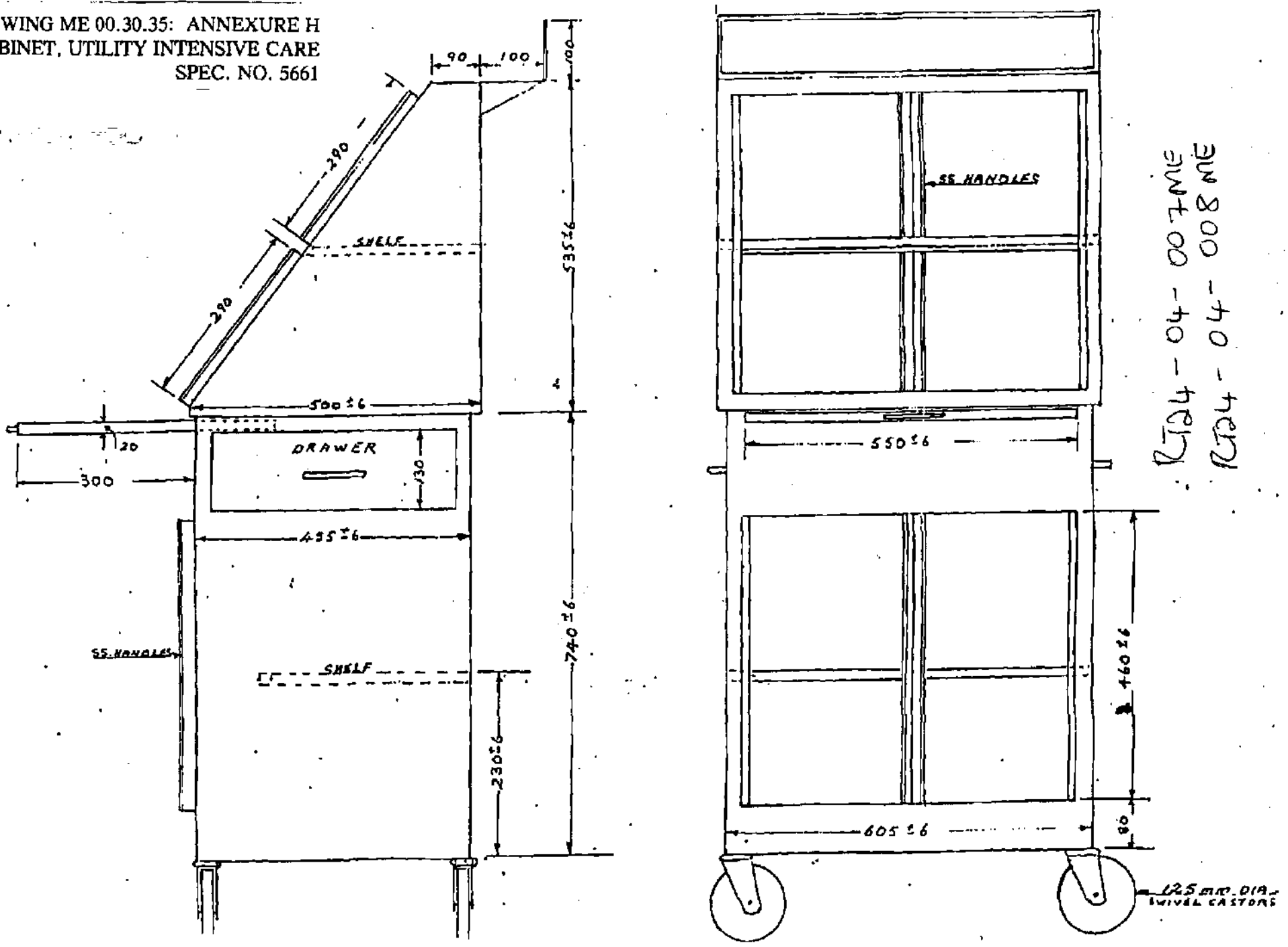

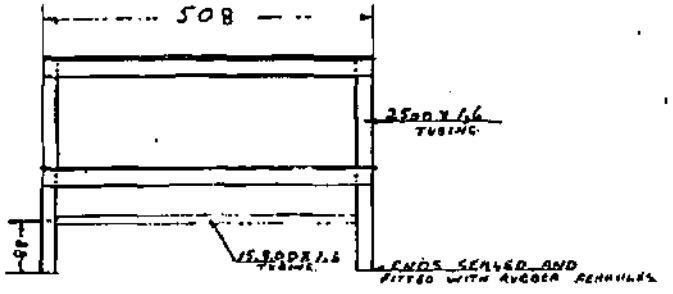

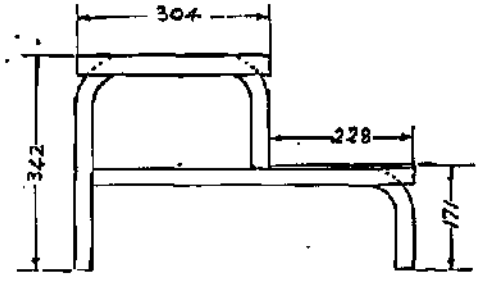

RT24-11-003ME
RT24-11-004ME
RT24-11-005ME
RT24-11-006ME
Single Step

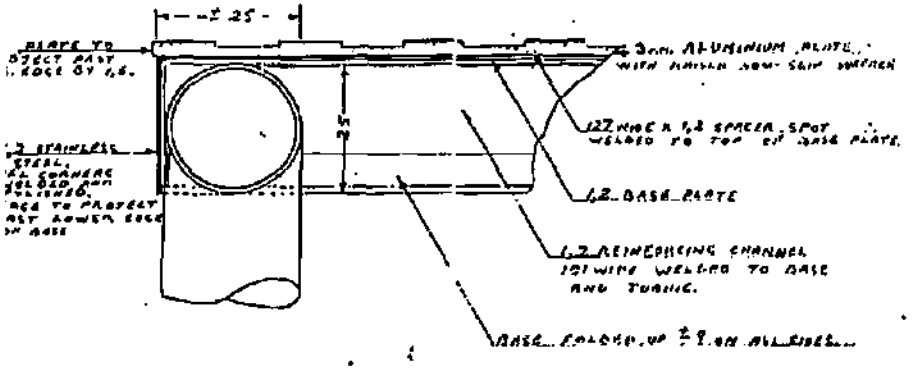

SECTIONAL DETAIL
ALUMINIUM TOP

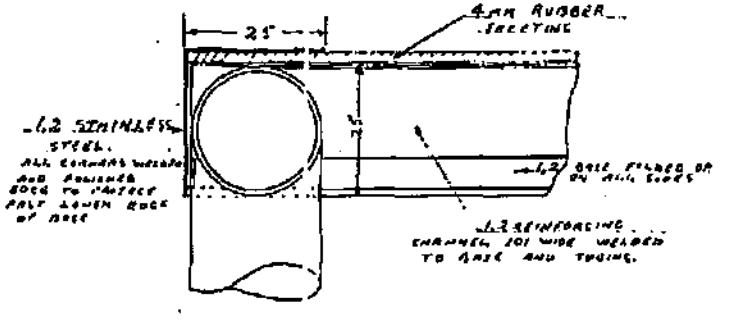

SECTIONAL DETAIL
RUBBER TOP

NOTE:-
DIMENSIONS ARE IN MILLIMETRES.
DRAWING TO BE READ IN CONJUNCTION WITH SPECIFICATION.

DRAWING ME 00.30.38: ANNEXURE J
STOOL, FOOT DOUBLE STEP
SPEC. NO. 834
SPEC. NO. 835

ANNEXURE G

RT24-04-[illegible]006ME

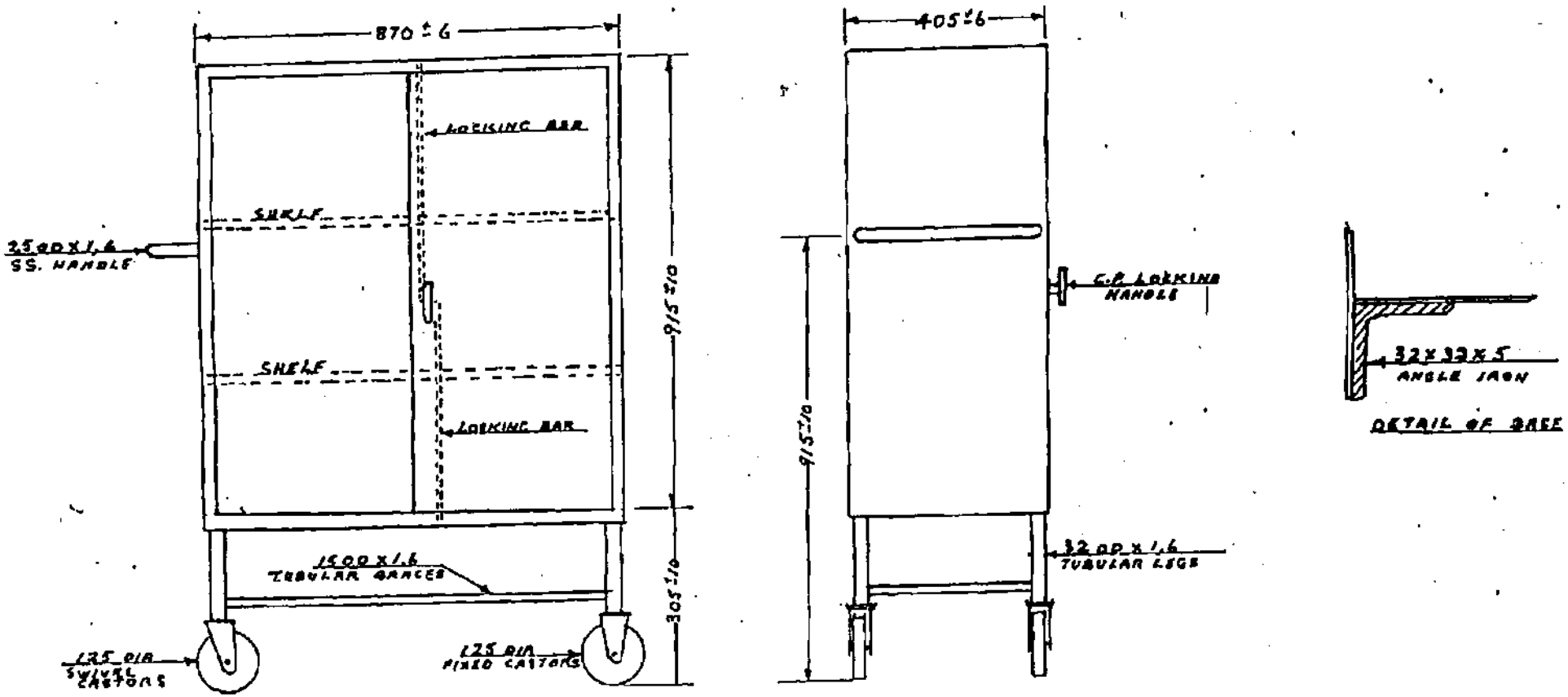

DRAWING ME 00.30.45: ANNEXURE G
CABINET, STERILE PACK, MOBILE
SPEC. NO. 820