APPENDIX G

SPECIFICATION
FOR
kick abouts

0. APPLICABLE STANDARDS

0.1 The latest issues of the following standards form part of this specification:

SABS 417 Stainless steelware for medical and catering services in institutions

SABS 621 Castors for hospital equipment

1. SCOPE

1.1 This specification covers the material, dimensional and constructional requirements for two types of stainless steel kick-abouts (for buckets and basins) intended for use in hospitals.

NOTE: The following requirements must be specified in tender invitations and in each order or contract:

a) The type of kick-about required (see 2.1)
b) The finish (see 3.5)

2. TYPES

2.1 The kick-abouts shall be of one of the following two types, as specified by the purchaser:

a) Type A. A tubular frame with a circular top, mounted horizontal on four braced legs fitted with castors and suitable for carrying a slop bucket.
b) Type B. A tubular frame with a circular top, mounted on four legs fitted with castors and suitable for carrying a kick-about basin.

3. REQUIREMENTS

3.1 MATERIAL

3.1.1 Stainless Steel. Stainless steel used shall be 18/8 (AISI Type 304) stainless steel, or other acceptable austenitic stainless steel of weldable quality.

3.1.2 Welding Electrodes and Filler Rods. Filler metal used in fusion welding shall be such as will produce a joint complying with the requirements of 3.2.

3.2 FUSION WELDED JOINTS. Parts joined by fusion welding shall be close fitting and in correct alignment and the joints shall have mechanical properties and corrosion resistance at least equal to those of the parent metal. Weld faces shall be smooth,

clean and free from porosity, cavities, spatter and trapped slag. They shall merge smoothly into the surface of the parent metal without overlap or undue undercut. The weld metal, heat affected zone and adjacent parent metal shall be free from cracks. Where welding is done from one side only, there shall be full penetration of the joint.

3.3 DESIGN AND DIMENSIONS. The general design and overall dimensions shall conform to those in Fig. 1(a) or Fig. 1(b), as relevant.

3.4 FRAMES

3.4.1 General. The top ring and, in the case of Type A, the horizontal braces, shall be of stainless steel tube of nominal outside diameter at least 16 mm and of nominal wall thickness at least 1,20 mm . The legs shall be of stainless steel tube of nominal outside diameter at least 25 mm and of nominal wall thickness at least 1,20 mm . The legs shall be so positioned to the top ring that no part of their outer surfaces protrudes inside an imaginary vertical cylinder projected from the inner diameter of the top ring. All joints shall be fusion welded (see 3.2). There shall be no wrinkling of the tubes and any flattening or reduction in diameter shall not exceed 4 % of the actual outside diameter of the tube. A drag chain shall be fitted to the underside of the frame. The drag chain shall be of non-ferrous metal, free from insulating finishes (such as lacquer) and shall have a drag length of at least 50 mm on the floor.

3.4.2 Type A Kick-about. The lower ends of legs shall be joined together by means of horizontal braces, arranged in a flat cross formation, and their upper ends shall be welded to the ring (see 3.4.1). The kick-about shall be capable of holding a 14 ℓ bucket (of the type and dimensions specified in SABS 417).

3.4.3 Type B Kick-about. The kick-about shall be capable of accommodating a kick-about basin of the type and dimensions specified in SABS 417.

3.4.4 Castors. The kick-about shall be fitted with four 50 mm castors complying with the requirements of SABS 621.

3.5 FINISH. The surfaces, including the welds, shall be smooth, free from pits, deep scratches, buckles and other defects and shall have a medium directional satin finish or a bright polished finish, as specified by the purchaser. The quality of the finish shall not be inferior to that of the finish on the relevant reference sample held by the South African Bureau of Standards[1]. Exposed edges shall not be sharp or rough, and shall be free from burrs.

---

1)Manufacturers may, on application to the South African Bureau of Standards, inspect the reference sample.

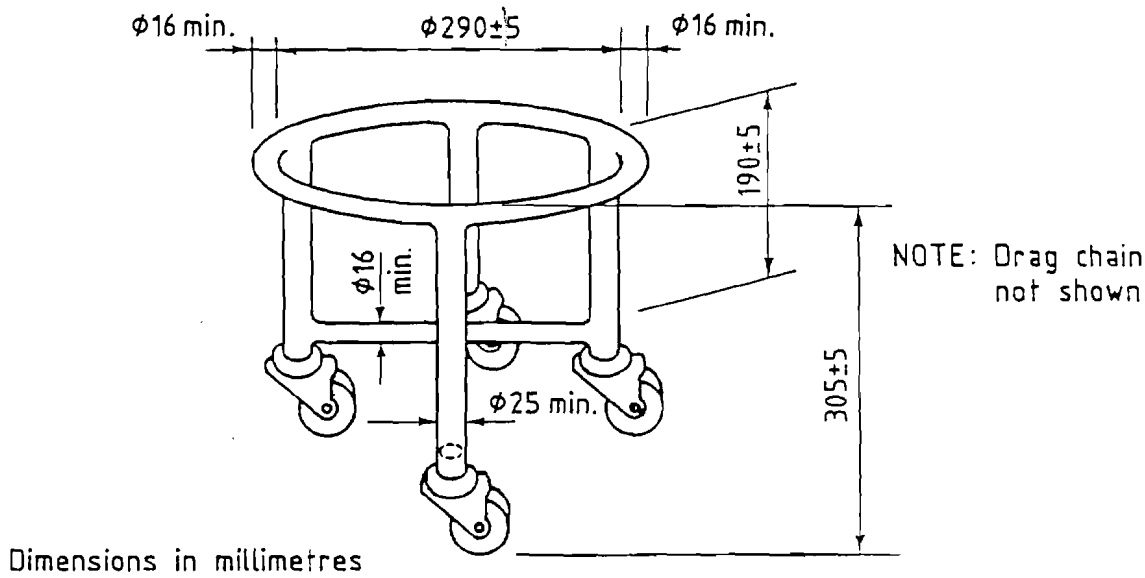

Fig. 1(a) - Type A Kick-about

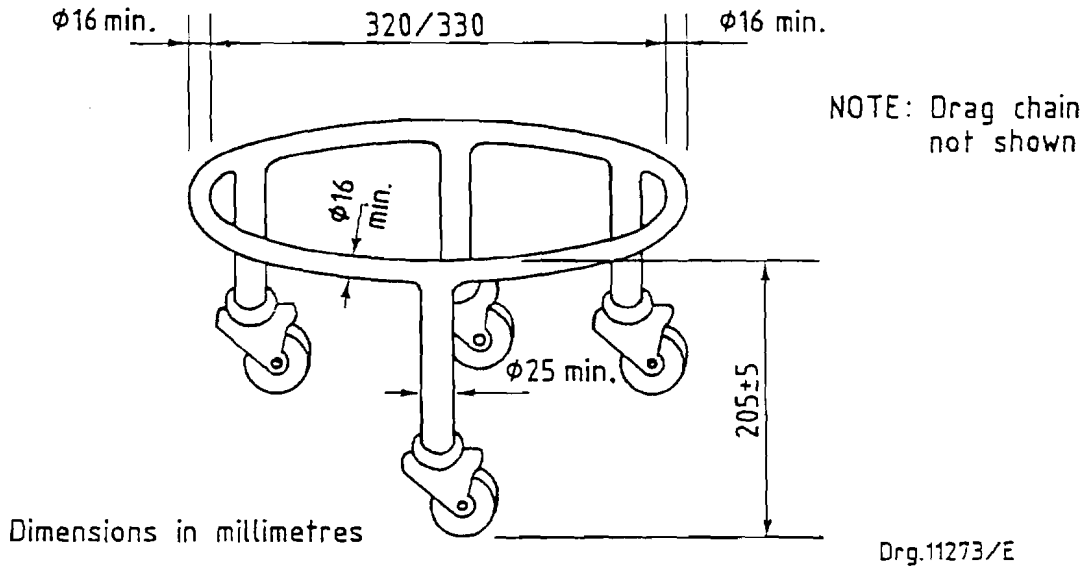

Fig. 1(b) - Type B Kick-about

Fig. 1 - Kick-about