APPENDIX M

BEDPAN AND URINAL STANDS

Scope of Amendment. The scope has been amended to include stands for bedpans only and the stands have been qualified as 'wheeled', and the requirements for design, dimensions and construction have been amended.

Subsection 1.1. Delete the text and substitute the following:

This specification covers the material, dimensional and constructional requirements for stainless steel wheeled stands for bedpans only and for bedpans and portable urinals, intended for use in hospitals and other medical institutions.

NOTE: The attention of users of this specification is drawn to the following requirements that must be specified in tender invitations, and in each order or contract:

a) The type of stand (see 3.2.1)
b) When relevant, that the trays shall have folded edges (see 3.4)

Subsection 3.2. Amend the subsection as follows:

Delete the first sentence and substitute the following:

3.2.1 General. The purchaser shall specify whether a bedpan stand or a bedpan and urinal stand is required. The design of the stand shall conform generally to that shown in Fig. 1 or Fig. 2, as relevant.

Insert the following subsectional heading before the words "The stand shall comprise":

3.2.2 Combined Bedpan and Urinal Stands.

Add the following new subsection:

3.2.3 Bedpan Stands. The stand shall comprise a main frame similar to that in 3.2.2, shall provide six pairs of bedpan holders only, and shall have the detail dimensions shown in Fig. 2.

Subsection 3.4. Insert between the words 'and' and 'their' in the second line the following:

(if so required by the purchaser)

Fig. 2 - Bedpan Stand/Bedpanstaander. Insert Fig. 2 after Fig. 1.

SPECIFICATION

for

BEDPAN AND URINAL STANDS

(Metric Units)

SECTION O. APPLICABLE STANDARDS

0.1 The latest issue of the following standard forms a part of this specification:

SABS 621 Castors for hospital equipment

SECTION 1. SCOPE

1.1 This specification covers the material, dimensional, and constructional requirements for stainless steel stands for bedpans and portable urinals intended for use in hospitals and other medical institutions.

SECTION 2. DEFINITIONS

2.1 For the purposes of this specification the following definition shall apply:

Acceptable. Acceptable to the purchaser.

SECTION 3. REQUIREMENTS

3.1 MATERIALS

3.1.1 Stainless Steel. The steel shall be 18/8 austenitic stainless steel (AISI Type 304) or other acceptable austenitic stainless steel of weldable quality.

3.1.2 Welding Electrodes and Filler Rods. Filler metal used in fusion welding shall be such as will produce a joint having mechanical properties and corrosion resistance of at least the same order as those of the parent metal.

3.2 DESIGN. The design of the stands shall conform generally to that shown in Figure 1.

The stands shall comprise

a) a main frame consisting of two upright members and three horizontal rails, all made from stainless steel tubes of outside diameter at least 25 mm and wall thickness at least 1.6 mm (see A and B of Figure 1);

b) three pairs of urinal holders made from stainless steel rod of diameter at least 9.5 mm and welded to the top rail (see C of Figure 1);

c) three pairs of bedpan holders made from stainless steel rod of diameter at least 9.5 mm and welded to the middle rail (see D of Figure 1);

d) four tray supports made from stainless steel strip of cross-section at least 20 mm x 5 mm (see E and F of Figure 1). The two upper supports shall each be mounted on a stainless steel tubular pillar, of outside diameter at least 16 mm and wall thickness at least 1.6 mm, that is welded to the top rail. The two lower supports shall be mounted directly on the bottom rail;

e) two trays (upper and lower) made from stainless steel plate of thickness at least 1.2 mm (see B of Figure 1); and

f) four 75-mm castors complying with SABS 621.

3.3 DIMENSIONS. The dimensions shall conform to those given in Figure 1. Except where otherwise indicated, they shall be nominal dimensions.

3.4 CONSTRUCTION. All joints shall be fusion welded (see 3.5). The trays shall be at least 25 mm deep and their upper edges shall be formed by folding over the steel plate (outwards) to form a double thickness for a width of at least 6.0 mm.

3.5 FUSION-WELDED JOINTS. Parts joined by fusion welding shall be close fitting and in correct alignment. Weld faces shall be smooth, clean, and free from porosity and cavities and shall merge smoothly into the surface of the parent metal without overlap or undue undercut. The weld metal, heat affected zone, and adjacent parent metal shall be free from cracks. Where welding is done from one side only, there shall be full penetration of the joint.

3.6 FINISH. All surfaces shall be free from pits, scratches, scale, crimps, buckles, and other defects and shall have an acceptable bright polished[1)] finish. All edges shall have a smooth finish. The free ends of the urinal and bedpan holders shall be rounded, and the holders may be covered with a layer of tight fitting plastic of acceptable type and capable of withstanding, without failure, repeated sterilization with steam at 176°C.

[1)] A sample of stainless steel with an acceptable bright polished finish may be viewed at the South African Bureau of Standards.

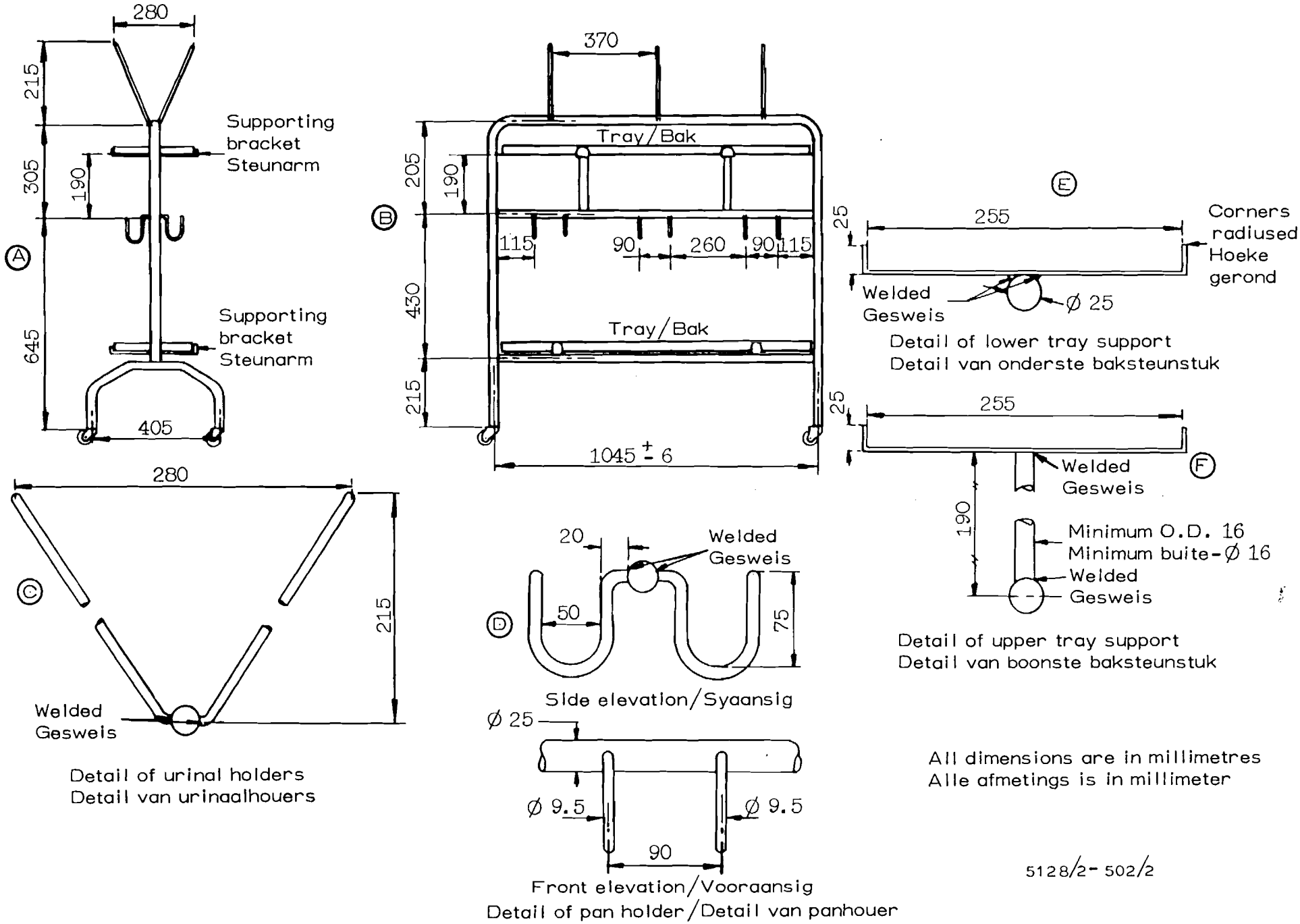

Fig. 1 — Bed Pan and Urinal Stand/Bedpan- en Urinaalstaander

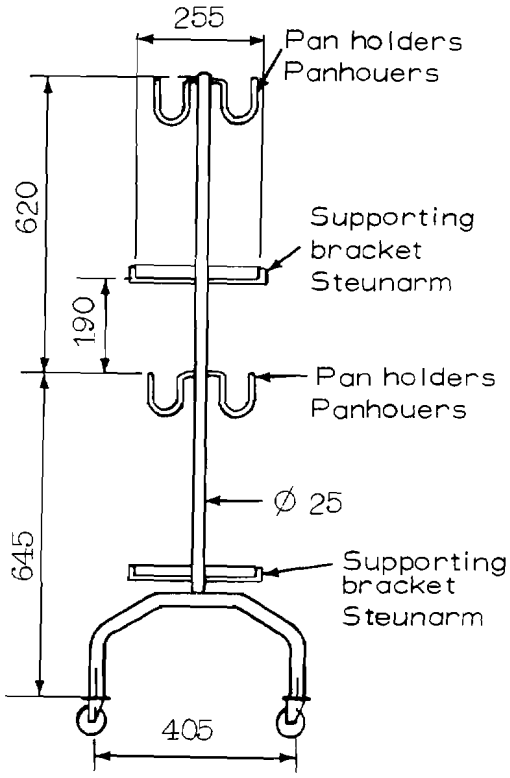

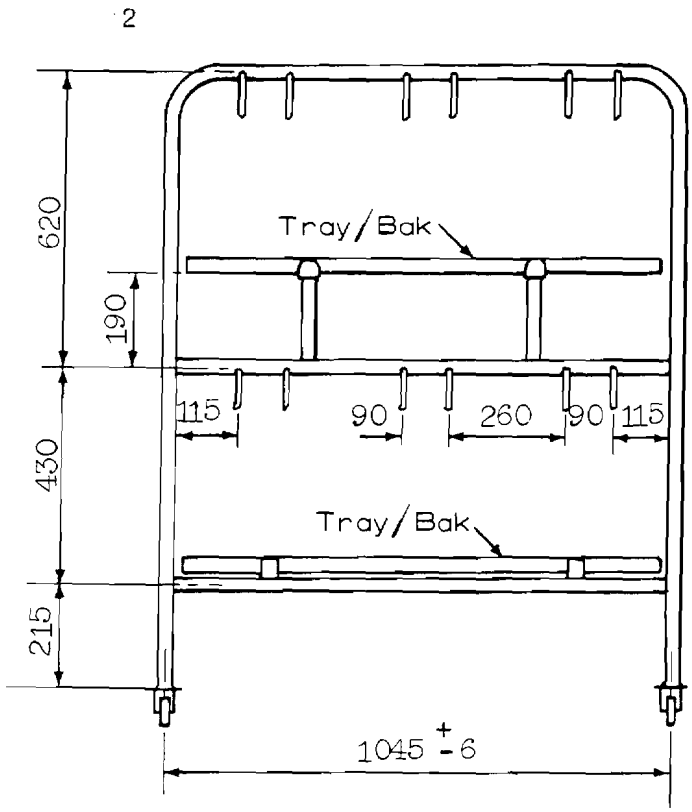

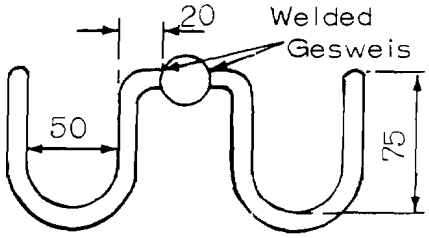

Side elevation/ Syaansig

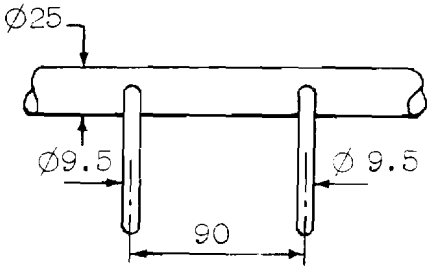

Front elevation/Vooraansig

Detail of pan holder/ Detail van panhouer

All dimensions are in millimetres
Alle afmetings is in millimeter

8393/1 - 502/1

Fig. 2 - Bed Pan Stand/ Bedpanstaander