APPENDIX P

SPECIFICATION

for

STAINLESS-STEEL-TOPPED TABLES

0. APPLICABLE STANDARDS

0.1 The latest issues of the following standards form part of this specification:

SABS 657 Steel tubes for non-pressure purposes
Part I: Steel tubes for scaffolding and for structural and general engineering purposes
SABS 663 Primer and enamel paint for hospital furniture

1. SCOPE

1.1 This specification covers the material, dimensional, and constructional requirements for stainless-steel-topped tables of two types intended for use in hospitals and other medical institutions.

NOTE: The following requirements must be specified in tender invitations and in the order or contract:

a) The type of table required and whether a shelf is required (see 3.1)
b) The length and width (see 4.4)
c) When relevant, that square tubes are required for the frame(s), legs, and (when relevant) braces (see 4.5.3 and 4.5.4)
d) When relevant, that the frame, legs, and (when relevant) shelf are to be separable (see 4.5.3)
e) When relevant, that non-adjustable floor-end fittings for legs are to be used (see 4.5.3)
f) When relevant, the other stainless steel or mild steel sections that are to be used (see NOTE to 4.5.4)
g) The colour of the enamel or powder coating finish on Type B tables (see 4.6)
h) Whether a directional satin or a mirror finish is required on the stainless steel (see 4.6)

2. DEFINITIONS

2.1 For the purposes of this specification the following definition shall apply:

Acceptable. Acceptable to the purchaser.

3. TYPES

3.1 Stainless steel tables shall be of one of the following types, as specified by the purchaser:

a) Type A. Having a stainless steel top, stainless steel frame, and stainless steel legs.
b) Type B. Having a stainless steel top, mild steel frame, and mild steel legs. In addition either type may, when so specified by the purchaser, have a shelf fitted.

4. REQUIREMENTS

4.1 MATERIALS

4.1.1 Rolled Steel Sections. Rolled steel sections shall be of a good quality mild steel and shall be free from cracks, fins, laminations, and other defects.

4.1.2 Mild Steel Tubes. Mild steel tubes shall comply with the relevant requirements for Grade 230 or Grade 250 tubes of SABS 657: Part I.

4.1.3 Stainless Steel. The stainless steel shall be 18/8 (AISI Type 304) stainless steel or other acceptable austenitic stainless steel of weldable quality.

4.1.4 Welding Electrodes and Filler Rods. The filler metal used in welds shall be such as to produce a joint having mechanical properties and corrosion resistance of at least the same order as those of the parent metal.

4.1.5 Paint. The paint used on Type B tables shall be an enamel, or a system comprising a primer and an enamel, complying with the requirements for Type III (catalyst-hardened) paint of SABS 663.

4.1.6 Powder Coating. Powder for powder coatings shall be a compounded epoxy resin suitable for application by a fluidized bed process or an aerostatic-spray process.

4.2 FUSION WELDED JOINTS. Parts joined by fusion welding shall be close fitting and in correct alignment. Weld faces shall be smooth, clean, and free from porosity, cavities, spatter, and trapped slag. They shall merge smoothly into the surface of the parent metal without overlap or undue undercut. The weld metal, heat affected zone, and adjacent parent metal shall be free from cracks. There shall be full penetration of the joint, even where welding is done from one side only.

4.3 SPOT WELDED JOINTS. Spot welded joints shall be close fitting and in correct alignment. Any spot welding used shall be resistance spot welding, and the spacing of the spots shall be such as to provide a strong acceptable joint. There shall be proper fusion between the parts welded, and the indentation of the surface of the weld shall be minimal.

4.4 DESIGN AND DIMENSIONS. The design shall be generally in accordance with Fig. 1, and the length and width of the table top shall be one of the following combinations, as specified by the purchaser:

1	2
Length, mm	Width, mm
1 720 ± 6	810 ± 6
1 680 ± 6	815 ± 6
865 ± 6	355 ± 6
810 ± 6	810 ± 6

The other dimensions shall conform to those given in Fig. 1 and 4.5. Except where otherwise indicated, the tolerance on dimensions shall be ± 3 mm . Normal mill tolerances shall apply to rolled materials.

4.5 CONSTRUCTION

4.5.1 Table Tops and Shelves

a) Frames of round tubes. Table tops and (when relevant) shelves shall be made from stainless steel of nominal thickness at least 1,2 mm .
The edges shall be flanged downwards around the frame on all four sides, each bend having a radius of 3 ± 1 mm . The free edges of the flanges shall be bent round the tubes of the frame and secured near the bottom centre lines of the tubes by corrosion resistant solid pop rivets or corrosion resistant self-tapping pan head screws. Alternatively the free edges of the flanges shall terminate on the outside centre lines of the tubes and be secured by fusion welding which is smoothed.
b) Frames of square tubes. Table tops and (when relevant) shelves shall be of the same material and thickness as in (a) above. The free edges shall be flanged downwards around the frame on all four sides, each bend having a radius of 3 ± 1 mm . The free edges of the flanges shall terminate flush with the bottom surfaces of the tubes of the frame and be secured near the bottom by corrosion resistant self-tapping pan head screws or by fusion welding, which is smoothed.

4.5.2 Stiffening of Tops and Shelves. Tops and shelves of thickness 2,0 mm or more need not be stiffened. Tops and shelves of thickness less than 2,0 mm shall be stiffened on the bottom surface as follows:

a) Tops and shelves of Type A tables. Tops and shelves of thickness less than 2,0 mm shall be stiffened (reinforced) on the bottom surface with at least one fully enclosed box channel, 125 mm wide by 25 mm deep, made of the same thickness of material as the top or shelf and spot welded to that surface in such position(s) as to ensure acceptable stiffness to the top or shelf.
b) Tops and shelves of Type B tables. Tops and (when relevant) shelves of thickness less than 2,0 mm shall be supported on a galvanized mild steel backing plate of thickness at least 1,6 mm and a layer of automobile under-body coating of thickness at least 1,6 mm shall be sandwiched between the backing plate and the stainless steel top or shelf (as relevant). The backing plate shall be supported along its centre line on a mild steel angle section of size 38 mm x 38 mm x 4,7 mm that is fusion welded to the end members of the frame.

4.5.3 Frame(s) and Legs. Except as allowed for in terms of the NOTE to 4.5.4, the frame(s) shall be made from round stainless steel or mild steel tubes (as relevant) of nominal outside diameter at least 32 mm and nominal wall thickness at least 1,6 mm, or (if so required by the purchaser) from square stainless steel or mild steel tubes (as relevant) of nominal outside dimension at least 32 mm and nominal wall thickness at least 1,6 mm . The legs shall be made from round stainless steel or mild steel tubes (as relevant) of nominal outside diameter at least 38 mm and nominal wall thickness at least 1,6 mm or (if so required by the purchaser) from

square stainless steel or mild steel tubes (as relevant) of nominal outside dimension at least 38 mm and nominal wall thickness at least 1,6 mm . The frame, legs, and (when relevant) shelf shall be completely welded together to form a permanently fixed unit or (if so required by the purchaser) shall be separately constructed and so screwed or bolted together as to facilitate dismantling for the purpose of transportation.
In the assembled condition the frame, legs, and (when relevant) shelf shall form a strong and sturdy unit. The floor ends of the legs shall be fitted with adjustable foot pieces that allow the height of the table to be adjusted by 0-35 mm or (if so required by the purchaser) shall have acceptable non-adjustable fittings. Adjustable foot pieces shall have a 19 mm diameter close-fit male screw of sufficient length to give a thread engagement of at least 25 mm when unscrewed to maximum extension. Foot pieces shall be of acceptable corrosion resistant metal and shall be of such form that they cannot damage floors.

4.5.4 Bracing. In the case of a table without a shelf, the legs shall be reinforced at the top with leg-to-frame corner gussets made from stainless steel plate of thickness at least 2,0 mm or from mild steel plate of thickness at least 2,0 mm (as relevant) or shall have leg-to-leg braces made from stainless steel tube or mild steel tube (as relevant) of outside diameter or dimension (as relevant) at least 32 mm and wall thickness at least 1,2 mm .
The gussets and tubular braces shall be fusion welded to form a rigid structure or, when relevant, shall be bolted in an acceptable manner for the purpose of dismantling for transportation. A table with a shelf requires no additional bracing.

NOTE: If so required by the purchaser, other acceptable stainless steel (in the case of Type A) and mild steel (in the case of Type B) sections may be used in the construction of the frame, legs, braces, and (when relevant) shelf, provided that such construction complies with the rest of the specification.

4.6 FINISH. All steel surfaces shall be free from pits, scratches, scale, crimps, buckles, and other defects.
Steel surfaces (other than of stainless steel) shall have a smooth enamel finish or an epoxy resin powder coating of the colour specified by the purchaser.
The thickness of the enamel or powder coating film shall be at least 35 µm, and if a primer is used, the thickness of the system shall be at least 60 µm . The paint finish shall adhere firmly to the underlying metal. Stainless steel surfaces shall have an acceptable directional satin or a mirror finish, as specified by the purchaser. The quality of the finish shall not be inferior to that of the finish on the relevant sample[1] held by the South African Bureau of Standards.

---

1)Manufacturers may on application to the South African Bureau of Standards inspect the reference sample.

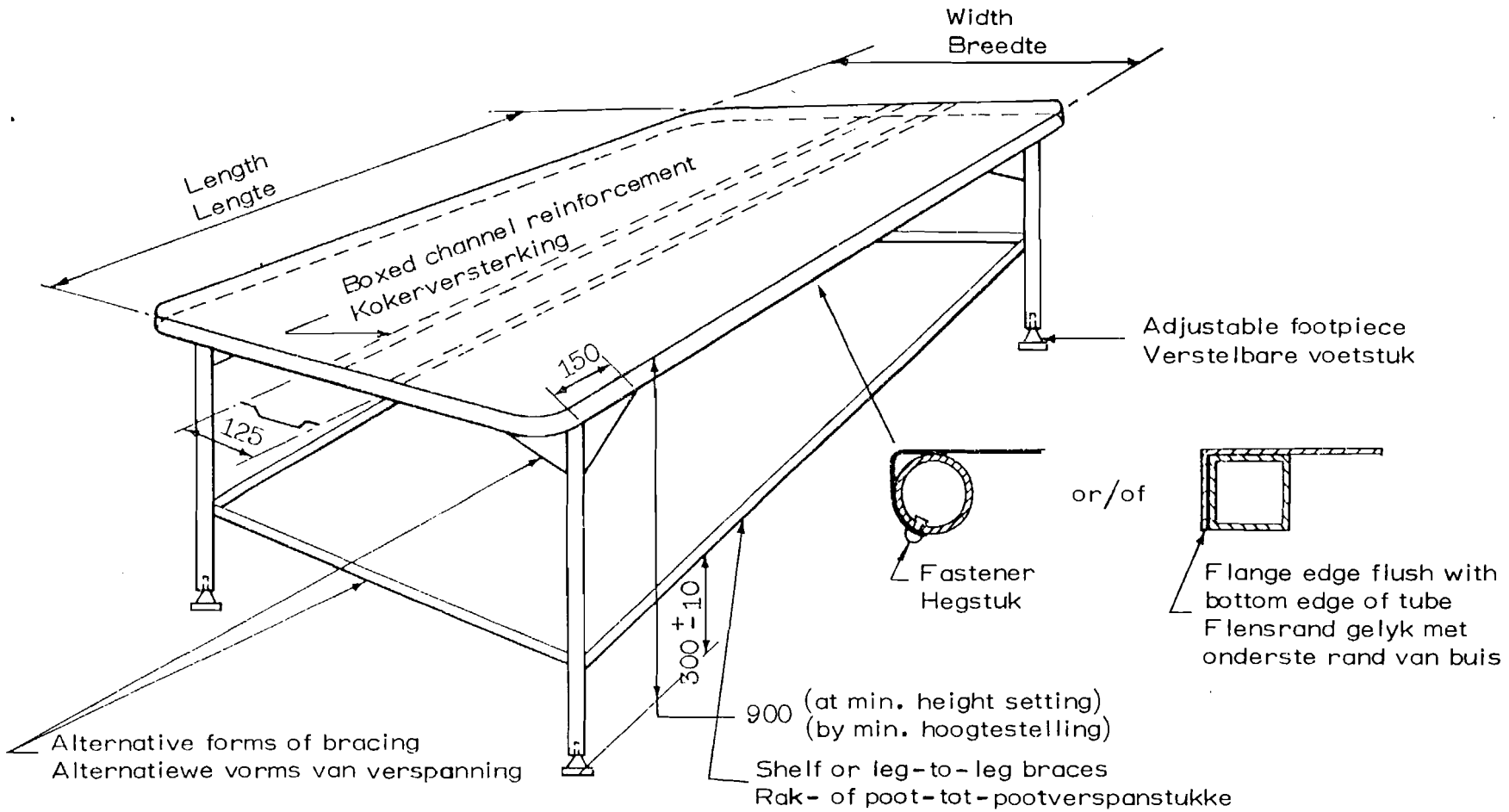

Dimensions in millimetres
Afmetings in millimeter

5172/1

Fig. 1 - Stainless-Steel-Topped Table
Tafel met Blad van Vlekvrystaal

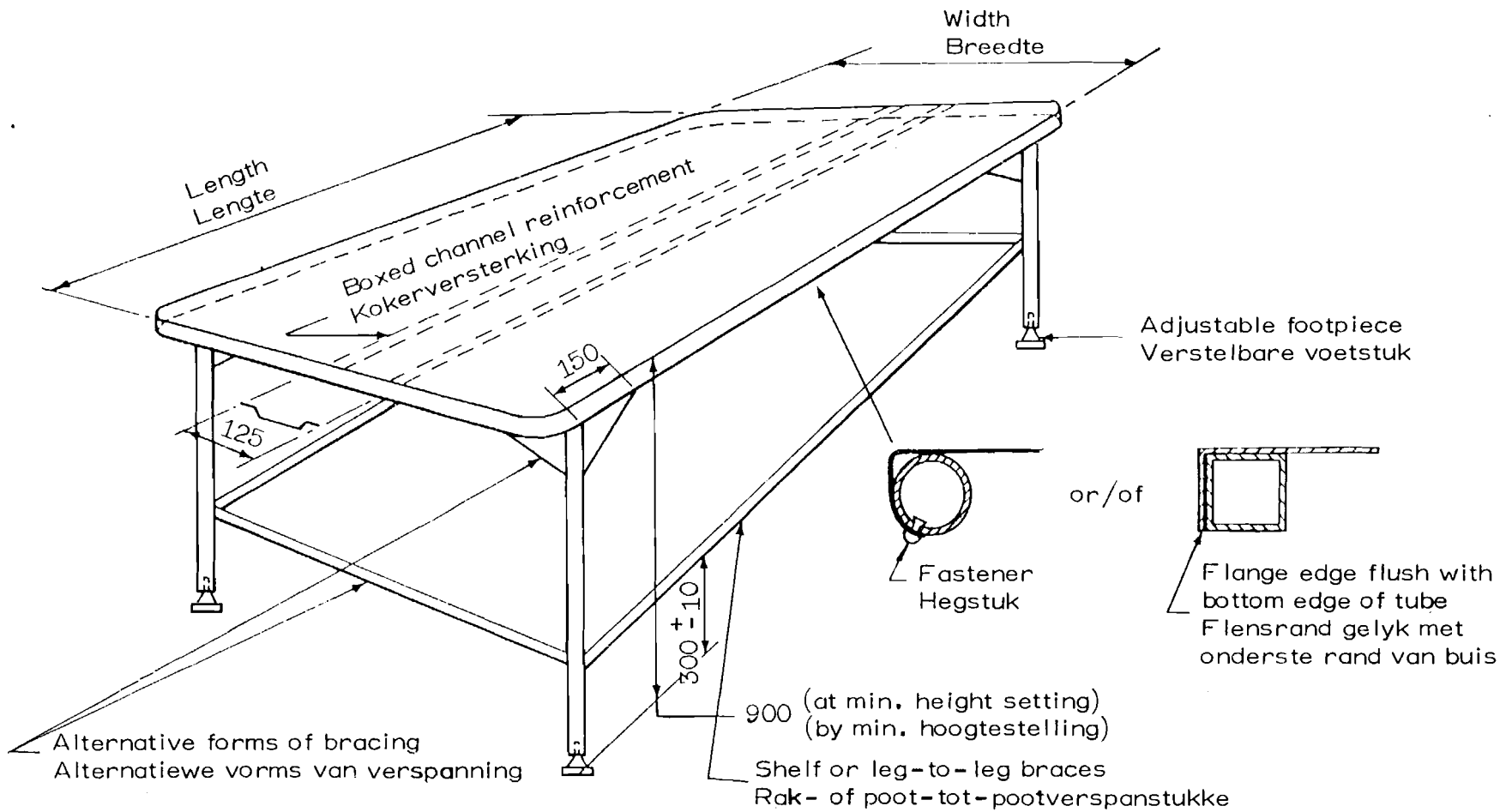

Dimensions in millimetres
Afmetings in millimeter

5172/1

Fig. 1 - Stainless-Steel-Topped Table
Tafel met Blad van Vlekvrystaal