APPENDIX K

SPECIFICATION

for

STOOLS, HOSPITAL (VISITORS; BATHROOM)

(Metric Units)

SECTION 0. APPLICABLE STANDARDS

0.1 The latest issues of the following standards form a part of this specification:

SABS 657 Steel tubes for general engineering purposes

SABS 726 Medical trolleys (dressing/medicine; instrument; anaesthetists')

SECTION 1. SCOPE

1.1 This specification covers material, dimensional, and constructional requirements for visitors' and bathroom stools intended for use in hospitals.

NOTE

a) The attention of users of this specification is drawn to the following requirements that must be specified in tender invitations and in the order or contract:

1) Whether visitors' stools or bathroom stools are required (see 3.3)

2) Whether mild steel or stainless steel is to be used (see 3.3)

b) The following requirements must be agreed upon between purchaser and manufacturer:

The material for finishing, and the colour and type of finish for, hardwood surfaces (see 3.4.3)

SECTION 2. DEFINITIONS

2.1 For the purposes of this specification the following definitions shall apply:

Acceptable. Acceptable to the purchaser.

Bright Polished Finish. A bright reflective finish obtained by polishing the surface without complete obliteration of previously existing grinding marks or other surface texture.

Directional Satin Finish. A finish obtained by so grinding the surface with fine abrasives (without subsequent polishing) as to leave a silky appearance, the abrasive marks running in the same general direction.

SECTION 3. REQUIREMENTS

3.1 MATERIAL

3.1.1 Rolled Steel Sections. Rolled steel sections shall be of a good quality mild steel and shall be free from cracks, fins, laminations, and other defects.

3.1.2 Mild Steel Tubes. Mild steel tubes shall comply with the relevant requirements for Grade 56 or Grade 68 Class D2T3 tubes of SABS 657.

3.1.3 Stainless Steel Tubes and Sections. Stainless steel tubes and sections shall be of 18/8 (AISI Type 304) stainless steel or other acceptable austenitic stainless steel of weldable quality.

3.1.4 Hardwood. Hardwood used shall be well seasoned, having a moisture content of 10 ± 2 per cent and a density of not less than 560 kg/m^3, and shall be free from defects.

3.1.5 Welding Electrodes and Filler Rods. Filler metal used in fusion welding and braze welding shall be such as to produce a joint that complies with 3.2.

3.2 FUSION WELDED JOINTS. Parts joined by fusion welding shall be close fitting and in correct alignment, and the joints shall have mechanical properties (and, when relevant, corrosion resistance) of at least the same order as those of the parent metal. Weld faces shall be smooth, clean, and free from porosity, cavities, spatter, and trapped slag. They shall merge smoothly into the surface of the parent metal without overlap or undue undercut. The weld metal, heat-affected zone, and adjacent parent metal shall be free from cracks. Where welding is done from one side only, there shall be complete penetration of the joint.

3.3 DESIGN AND CONSTRUCTION

3.3.1 General. The stools shall be generally similar to the typical design shown in Figure 1. Visitors' stools and bathroom stools shall be similar to one another, except that the length of the seat shall be 900 mm in the case of visitors' stools and 450 mm in the case of bathroom stools. The dimensions shall conform to those given in Figure 1 and 3.3. Except where otherwise indicated, the dimensions shall be subject to a tolerance of ± 5 mm. Normal mill tolerances shall apply. The frames shall be of stainless steel or mild steel as specified by the purchaser.

3.3.2 Main Frame. Each side of the main frame, consisting of a longitudinal member and two legs, shall be made from one continuous length of stainless steel tube of nominal outside diameter at least 25 mm and nominal wall thickness at least 1.20 mm, or of mild steel tube of nominal outside diameter at least 25 mm and nominal wall thickness at least 1.60 mm, as relevant.

3.3.3 Braces. The longitudinal members shall be joined near their ends by two cross braces of flat stainless steel or flat mild steel, as relevant, of nominal section at least 20 mm x 5 mm, and these shall be fusion welded to the longitudinal members so as to be flush with their upper surfaces. In addition, the legs constituting one side of the main frame shall be joined to the corresponding leg of the other side by a stainless steel tubular cross brace of nominal outside diameter at least 16 mm and nominal wall thickness at least 1.20 mm, or by a mild steel tubular cross brace of nominal outside diameter at least 16 mm and nominal wall thickness at least 1.60 mm as relevant. The cross braces shall be fusion welded to the legs.

3.3.4 Lugs. The longitudinal members of visitors' stools shall in addition to the two cross braces, have a stainless steel or mild steel lug (as relevant) of dimensions at least 25 x 20 x 5 mm, welded on the inside at mid-span. The lugs shall each have one hole of diameter 5 mm for a wood screw (see 3.3.7).

3.3.5 Plugs. The end of each leg shall be fitted with an acceptable corrosion resistant plug. The plug shall have a shoulder of diameter not exceeding the outside diameter of the legs, a length of at least 3 mm and shall be secured to the leg by the relevant of the following methods:

a) Mild steel and stainless steel plugs shall be suitably welded to prevent the entry of moisture;

b) zinc alloy plugs shall be driven in tight to form a permanent joint between the plug and the tube; and

c) non-metallic plugs shall be secured to the legs with an acceptable adhesive.

All plugs shall be so shaped and finished as not to damage floors during normal use if the covering ferrules become detached.

3.3.6 Ferrules. The ends of the legs shall, after plugging, be fitted with plastic ferrules of acceptable quality and size that completely envelop the ends of the legs to a height of 10 mm to 40 mm. The ferrules shall be secured to the legs with an acceptable adhesive.

3.3.7 Tops. The top shall be of hardwood at least 22 mm thick. The corners shall be rounded to a radius of 40 ± 5 mm and the edges shall be slightly rounded and smoothed. It shall have a slotted hole in the centre (see Figure 1) with rounded edges and it shall be securely attached to the frame by means of not less than two round-head wood screws through holes drilled in each flat brace, and one round-head wood screw through the hole drilled in each lug. The screws shall be of acceptable size and shall pull the top tight against the frame.

3.4 FINISH

3.4.1 Stainless Steel. Stainless steel surfaces shall be smooth and free from dents, pits, deep scratches, and other defects and shall have a smooth medium directional satin finish or a bright polished finish. The quality of the finish shall be at least equal to that of the finish on the relevant standard sample held by the South African Bureau of Standards[1]. All exposed edges shall be free from burrs, roughness, and sharpness.

3.4.2 Mild Steel. Mild steel surfaces shall be smooth and free from dents, pits, deep scratches, and other defects and shall have a smooth bright chromium-plated finish free from cloudy patches. The chromium plating shall comply with the requirements for plating in SABS 726.

3.4.3 Hardwood. Hardwood surfaces shall be sanded to a fine even finish. The surfaces shall be coated with an acceptable sealer or penetrant to render the wood resistant to moisture. The material used and the colour and the type of finish shall be agreed upon between purchaser and manufacturer.

---

[1] Manufacturers may, on application to the South African Bureau of Standards inspect the standard samples.

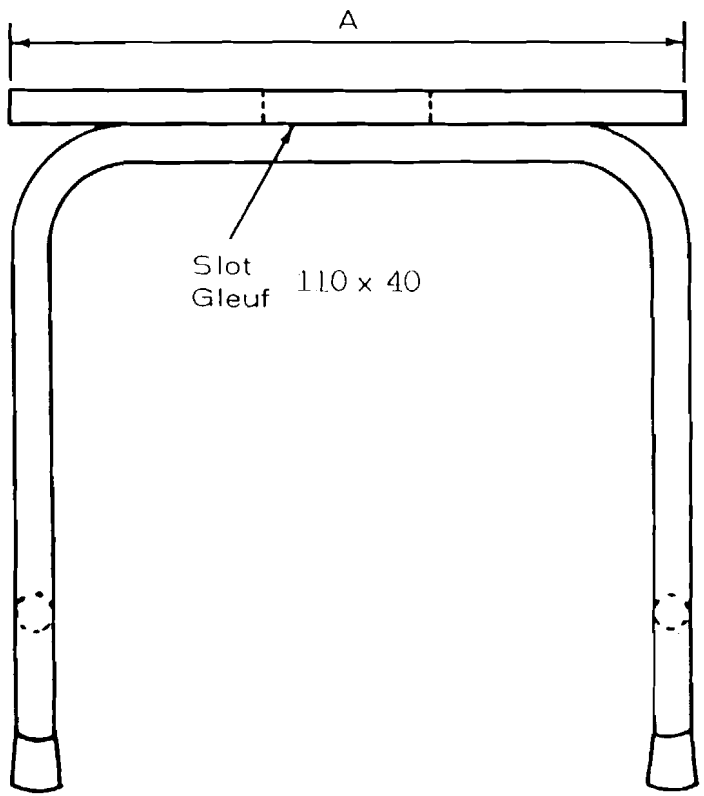

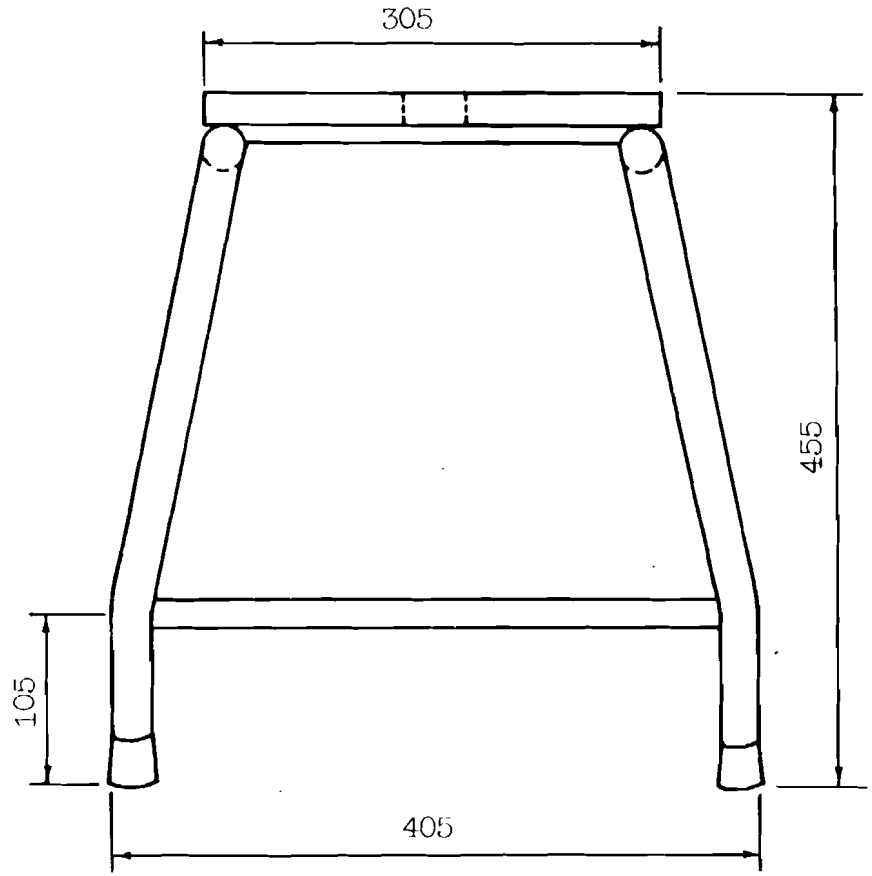

Dimensions in millimetres
Afmetings in millimeter

Bathroom stool
Badkamerstoel A = 450

Visitors stool
Besoekerstoel A = 900

5681/2-693/2

Fig. 1 — Hospital Stools (Visitors; Bathroom)
Hospitaalstoele (Besoekers; Badkamers)