APPENDIX N

SPECIFICATION

FOR

MAYO'S TABLES

0. APPLICABLE STANDARDS

0.1 The latest issues of the following standards form part of this specification:

AISI	Steel products manual: Stainless and heat resistant steels
SABS 417	Stainless steelware for medical and catering services in institutions
SABS 621	Castors for hospital equipment
SABS 657	Steel tubes for non-pressure purposes Part I: Steel tubes for scaffolding and for structural and general engineering purposes

1. SCOPE

1.1 This specification covers the material, dimensional and constructional requirements for Mayo's tables intended for use in hospitals.

NOTE: The attention of users of this specification is drawn to the following requirements that must be specified in tender invitations and in each order or contract:

a) Whether a stainless steel or mild steel frame is required (see 3.4)
b) When a mild steel frame is specified (see 3.4), the colour of the epoxy-powder coating finish (see 3.8)

2. DEFINITIONS

2.1 For the purposes of this specification the following definitions shall apply:

Acceptable. Acceptable to the purchaser.
Directional satin finish. A finish obtained by so grinding the surface with fine abrasives (without subsequent polishing) as to leave a silky appearance, the abrasive marks running in the same general direction.

3. REQUIREMENTS

3.1 MATERIAL

3.1.1 Rolled Steel Sections and Rods. Rolled steel sections and rods shall be of a good quality mild steel and shall be free from cracks, fins, laminations and other defects.

3.5 ADJUSTABLE TOP. The adjustable top shall be of stainless steel. The part that supports the tray shall be made from rod of diameter at least 10 mm, and the extension rod (that telescopes into the vertical frame member) shall be

a) of diameter at least 16 mm;
b) of length in the range 610-630 mm (measured from the top of the tray support rod);
c) such as will provide a neat sliding fit in the brass bush of the frame's vertical member; and
d) provided with a stop to ensure that it cannot be completely withdrawn from the stand.

The removable tray shall be a good fit on the tray support, with a minimum of perceptible side and end play.

3.6 TRAY. The tray shall be removable and shall comply with the requirements of serving tray size number 8, in SABS 417. Section 5.44

3.7 RIGIDITY OF FRAME AND TRAY. When tested in accordance with 4.1, the maximum deflection shall not exceed 15 mm .

3.8 FINISH. All surfaces shall be clean, smooth and free from pits, deep scratches, scale, crimps, buckles and other defects that may affect their serviceability. Stainless steel surfaces shall have a medium directional satin finish[1]. When a mild steel frame is specified, the frame shall have a smooth epoxy-powder coating finish of the colour specified by the purchaser.

4. TEST

4.1 RIGIDITY TEST. Extend the Mayo's table to its maximum height. Place a masspiece of mass 2 ± 0,1 kg in one corner of the tray and measure the vertical deflection caused to the corner of the tray. Repeat the test for each of the three remaining corners and check each measurement for compliance with the requirements of 3.7.

---

1) Information regarding a medium directional satin finish is obtainable from the South African Bureau of Standards.

3.1.2 Mild Steel Tubes. Mild steel tubes shall comply with the relevant requirements for Grade 210, Type EFW tubes of SABS 657: Part I.

3.1.3 Stainless Steel. Stainless steel shall be AISI Type 304 (18/8) stainless steel or other acceptable austenitic stainless steel of weldable quality.

3.1.4 Welding Electrodes and Filler Rods. Filler metal used in fusion welding and in braze welding shall be such as will produce a joint that complies with the relevant requirements of 3.2.

3.2 FUSION-WELDED JOINTS. Parts joined by fusion welding shall be close-fitting and in correct alignment, and the joints shall have mechanical properties and (when relevant) corrosion resistance of at least the same order as those of the parent metal. Weld faces shall be smooth, clean and free from porosity, cavities, spatter and trapped slag. They shall merge smoothly into the surface of the parent metal without overlap or undue undercut. The weld metal, heat-affected zone and adjacent parent metal shall be free from cracks. Where welding is done from one side only, there shall be full penetration of the joint.

3.3 DESIGN AND DIMENSIONS. The design shall be generally in accordance with that shown in Fig. 1. The dimensions shall conform to those in Fig. 1 and in 3.4, 3.5 and 3.6. Except where otherwise indicated, the dimensions shall be subject to a tolerance of ± 5 mm . Normal mill tolerances shall apply.

3.4 FRAME. The frame shall be made of stainless steel or of mild steel, as specified by the purchaser. The bottom horizontal member and legs shall be made from stainless steel tube or from mild steel tube (as relevant) of nominal outside size at least 25 mm and nominal wall thickness at least 1,60 mm . The vertical member shall be made from stainless steel tube or from mild steel tube (as relevant) having a nominal outside diameter of at least 32 mm and a nominal wall thickness of at least 1,60 mm . The lower end of the vertical member shall be suitably formed to fit the profile of the bottom horizontal member and shall be welded to it. The top (free) end of the vertical member shall

a) be securely fitted with a brass bush of length at least 38 mm; and
b) have an acceptable clamping device to clamp the extension rod of the adjustable top in any required position.

Each leg of the bottom horizontal member shall be fitted with a castor of size 75 mm complying with the relevant requirements of SABS 621. There shall be no wrinkling of the tubes and any flattening or reduction in diameter/size shall not exceed 4 % of the actual outside diameter/size of the tubes. A drag chain shall be fitted to the underside of the frame. The drag chain shall be of non-ferrous metal, free from insulating finishes (such as lacquer) and shall have a drag length of at least 150 mm on the floor.

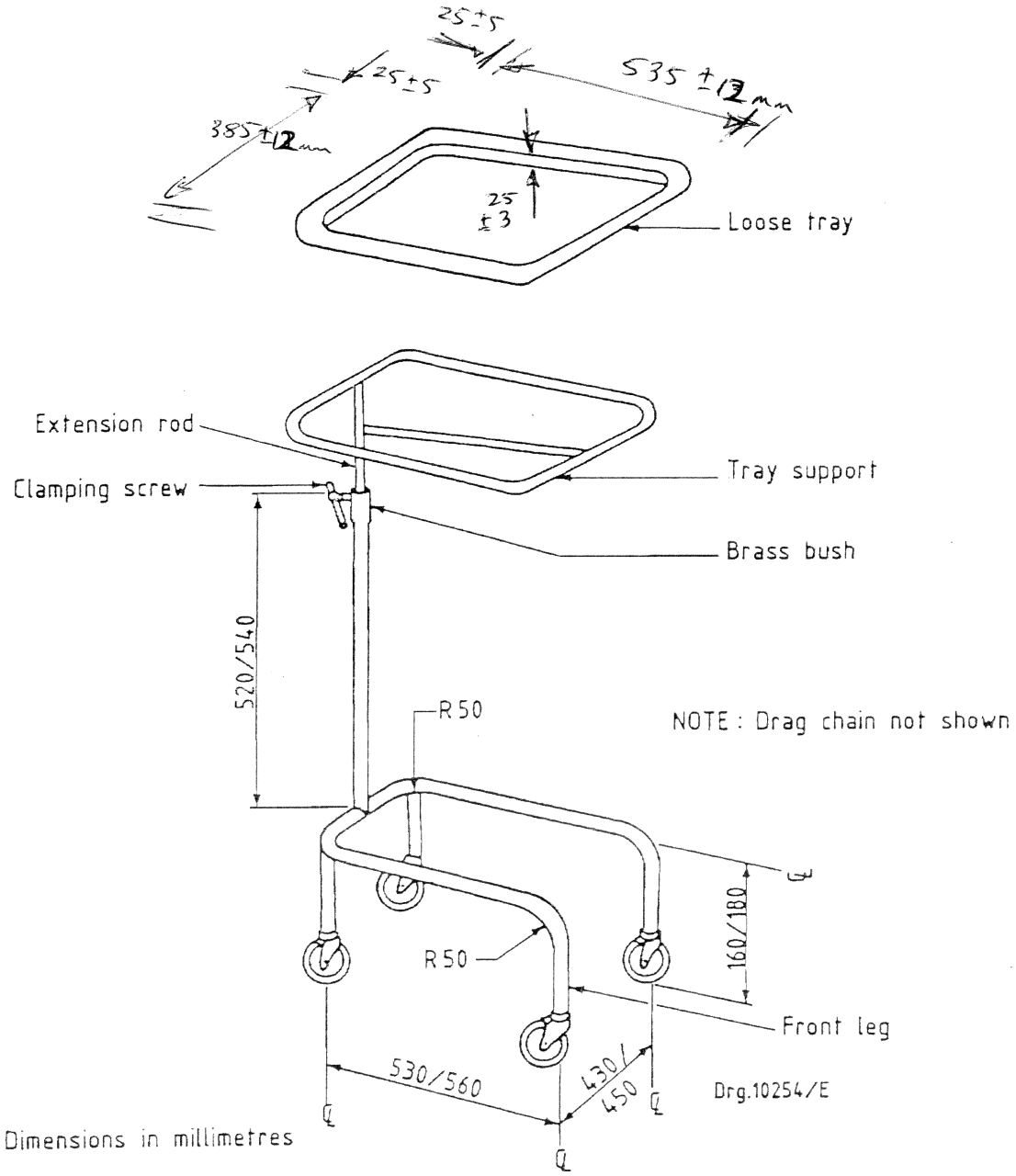

Fig. 1 - Mayo's Table